SANYO

# SANYO
# PORTABLE RADIO
# CASSETTE RECORDER
# M9800TU
# SERVICE MANUAL

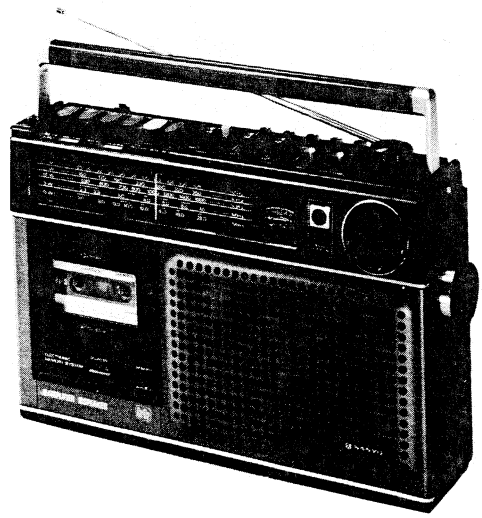

## SPECIFICATIONS

| | |
|---|---|
| Recording system | AC bias, double track |
| Erasing system | AC erase |
| Tape speed | 1-7/8 ips. (4.75 cm/s) |
| Rewind & Fast forward time | 1'30" (C-60) |
| Speed accuracy | ±2% |
| Frequency response | 80 – 10,000 Hz ±6dB |
| Signal to noise ratio | 45dB |
| Wow & Flutter | 0.3% RMS |
| Terminal impedance | EXT MIC: 15K ohms<br>DIN input 3K ohms<br>output 1K ohms<br>EARPHONE: 8 ohms |
| Frequency range | AM: 510 – 1605 KHz<br>LW: 150 – 350 KHz<br>SW1: 2.3 – 7.0 MHz<br>SW2: 7.0 – 22.0 MHz<br>FM: 87.5 – 108 MHz |
| Power output | TWEETER: 650mW<br>WOOFER: 3W |
| Current consumption | PLAY: less than 167mA<br>REW & F.FWD: less than 230mA |
| Power comsumption | 12W |
| Power source | DC: 9V D cell x 6<br>AC: 115/230V 50/60Hz |
| Dimensions | 14-9/16"(W) x 4-1/4"(D) x 9-7/16"(H)<br>(372 x 108 x 240mm) |
| Weight | Approx. 8 lbs. 7 oz. (3.9 Kg) excluding batteries |

## ADJUSTMENT OF PINCH ROLLER

1. Set the unit to the PLAY mode.
2. Apply a tension gauge to the pinch roller. Read the gauge at the precise moment when the pinch roller separates from the capstan.
3. If the gauge reading is within a range of 450 – 650g, no adjustment is necessary. If otherwide, make adjustment by changing the force of the spring coil. (See exploded view No. 24)

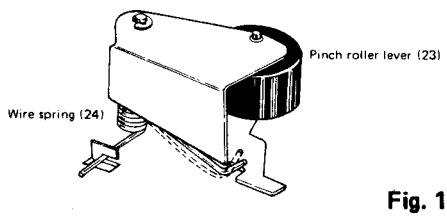


Fig. 1

## TORQUE ADJUSTMENT

1. Set the unit to the PLAY, FAST FORWARD or REWIND mode.
2. Measure the each torque with a torque gauge. They should be as following;

| | |
|---|---|
| PLAY | 30 – 60g/cm |
| FAST FORWARD | 60 – 110g/cm |
| REWIND | 60 – 110g/cm |

3. If the each torque fails to reach the standard value. Clean the drive belt, flywheel, motor pulley, take-up reel, idler and rewind roller with a cotton swab soaked in alcohol.

## ADJUSTMENT OF HEAD AZIMUTH

1. Connect the unit to a power source and insert a test cassette tape (7K Hz pre-recorded) in the cassette compartment.
2. Connect an 8 ohm dummy load with the VTVM across it to the EXT. SP jack on the unit.
3. Set the unit into the PLAY mode.
4. Turn the head azimuth adjusting screw until the maximum value with reading on the VTVM.
5. Fasten the adjusting screw securely by applying paint or glue.

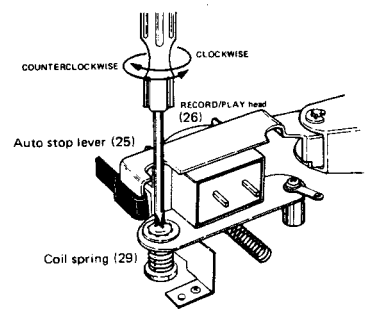


Fig. 2

## AUTO-STOP ADJUSTMENT

Measure the senser pressure with a tension gauge with the unit set in the playback mode. The unit should be shut off when the senser pressure stand within a range of 30 to 55 grams. (Fig. 3)
If the shut-off mechanism fails to function at a senser pressure of 30 to 55 grams, adjust the spring coil (Mechanism No. 73).

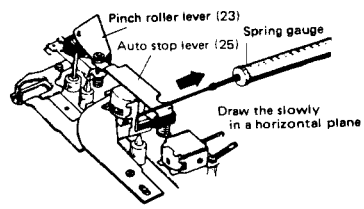


Fig. 3

### LW ALIGNMENT

| Step | Adjusting Circuit | Connections Input | Connections Output | SG frequency | Position of tuning dial | Adjustment | VTVM Oscilloscope |
|---|---|---|---|---|---|---|---|
| 1 | O.S.C. | Connect AM SG. to Test Loop. | Connect VTVM to speaker terminals. | 145kHz (400Hz 30% modulation | Low end of dial scale | L118 | MAX. |
| 2 | | | | 365kHz (400Hz 30% modulation) | High end of dial scale | CT10 | |
| 3 | ANT. | Connect AM SG. to Test Loop. | Connect VTVM to speaker terminals. | 160kHz (400Hz 30% modulation) | 160kHz on dial scale | L111-2 | MAX. |
| 4 | | | | 340kHz (400Hz 30% modulation) | 340kHz on dial scale | CT9 | |
| 5 | Repeat adjustments. | | | | | | |

# TUNER ADJUSTMENT

## FM ALIGNMENT

| Step | Adjusting Circuit | Connections | | SG frequency | Position of tuning dial | Adjustment | VTVM Oscilloscope |
|---|---|---|---|---|---|---|---|
| | | Input | Output | | | | |
| 1 | I.F. | Connect sweep generator to Ⓗ VC1, Ⓔ TP2 | Connect oscilloscope to Ⓗ R332, Ⓔ Shield plate | 10.7 MHz (none modulation) | Near max. capacity of VC. at position with no unrequired signal. | T301, T302 | 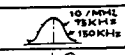 |
| 2 | Ratio Det. | | | | | T303 | 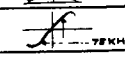 |
| 3 | O. S. C. | Connect FM SG. to Ⓗ TP3 Ⓔ TP2 | Connect VTVM to speaker terminal. | 87 MHz (400 Hz 30% modulation) | Low end of dial scale | L104 | Max. |
| 4 | | | | 109 MHz (400 Hz 30% modulation) | High end of dial scale | CT2 | |
| 5 | ANT | Connect FM SG. to Ⓗ TP3 Ⓔ TP2 | Connect VTVM to Speaker terminal. | 90 MHz (400 Hz 30% modulation) | 90 MHz on dial scale | L102 | Max. |
| 6 | | | | 108 MHz (400 Hz 30% modulation) | 108 MHz on dial scale | CT1 | |
| 7 | Repeat adjustments. | | | | | | |

PREPARE:
1. Variable Capacitors completely closed.
2. Set the dial pointer to very left line of dial scale.
3. Connect sweep generator, FM SG. VTVM and oscilloscope. FM aerial input impedance is 75 ohm.
4. Use a screwdrive with plastic grip for all adjustments.

## AM ALIGNMENT

| Step | Adjusting Circuit | Connections | | SG frequency | Position of tuning dial | Adjustment | VTVM Oscilloscope |
|---|---|---|---|---|---|---|---|
| | | Input | Output | | | | |
| 1 | I. F. | Connect sweep generator to TEST LOOP. | Connect oscilloscope to EXT. SP. | 460 KHz (400 Hz 30% modulation | Low end of dial scale at position of no unrequired signal. | T304,305 | Max. |
| 2 | O. S. C. | Connect AM SG. to TEST LOOP. | Connect VTVM to EXT. SP. terminals | 505 KHz (400 Hz 30% modulation) | Low end of dial scale | L117 | Max. |
| 3 | | | | 1650 KHz (400 Hz 30% modulation) | High end of dial scale | CT4 | |
| 4 | AERIAL | Connect AM SG. to TEST LOOP . | Connect VTVM to EXT. SP. terminals. | 600 KHz (400 Hz 30% modulation) | 600 KHz on dial scale | L111-1 | Max. |
| 5 | | | | 1400 KHz (400 Hz 30% modulation) | 1400 KHz on dial scale | CT3 | |
| 6 | Repeat adjustment | | | | | | |

PREPARE:
1. Variable capacitor completely closed.
2. Set the dial pointer to very left line on dial scale.
3. Use a screwdriver with plastic grip for all adjustments.
4. Selector switch to "AM".

## SW1 ALIGNMENT

| Step | Adjusting Circuit | Connections | | SG frequency | Position of tuning dial | Adjustment | VTVM Oscilloscope |
|---|---|---|---|---|---|---|---|
| | | Input | Output | | | | |
| 1 | O.S.C. | Connect AM SG. to ANT terminal through IRE dummy. | Connect VTVM to EXT. SP. terminals. | 2.2MHz (400Hz 30% modulation) | Low end of dial scale | L116 | MAX. |
| 2 | | | | 7.2MHz (400Hz 30% modulation) | High end of dial scale | CT8 | |
| 3 | ANT. | Connect AM SG. to ANT terminal through IRE dummy. | Connect VTVM to EXT. SP. terminals. | 2.5MHz (400Hz 30% modulation) | 2.5MHz on dial scale | L110 | MAX. |
| 4 | | | | 6.5MHz (400Hz 30% modulation) | 6.5MHz on dial scale | CT6 | |
| 5 | Repeat adjustments. | | | | | | |

PREPARE:
1. Set the dial pointer to very left line dial scale.
2. Connect signal generator to dummy antenna.
3. Use screwdriver with plastic glip for all adjustments.
4. Selector switch to "SW1".

## SW2 ALIGNMENT

| Step | Adjusting Circuit | Connections | | SG frequency | Position of tuning dial | Adjustment | VTVM Oscilloscope |
|---|---|---|---|---|---|---|---|
| | | Input | Output | | | | |
| 1 | O.S.C. | Connect AM SG. to ANT terminal through IRE dummy. | Connect VTVM to EXT. SP terminals. | 6.8MHz (400Hz 30% modulation) | Low end of dial scale | L115 | MAX. |
| 2 | | | | 22.7MHz (400Hz 30% modulation) | High end of dial scale | CT7 | |
| 3 | ANT. | Connect AM SG. to ANT terminal through IRE dummy. | Connect VTVM to EXT. SP.terminal | 8.5MHz (400Hz 30% modulation) | 8.5MHz on dial scale | L109 | MAX. |
| 4 | | | | 21.0MHz (400Hz 30% modulation) | 21.0MHz on dial scale | CT5 | |
| 5 | Repeat adjustments. | | | | | | |

PREPARE:
1. Set the dial pointer to very left line dial scale.
2. Connect signal generator to dummy antenna.
3. Use screwdriver with plastic glip for all adjustments.
4. Selector switch to "SW2".

## PARTS LIST

| Key No. | Part No. | Description | Q'ty |
|---|---|---|---|
| **PACKING** | | | |
| | 141-6-144T-25200 | Styrol filler, Right side | 1 |
| | 141-6-144T-25300 | Styrol filler, Left side | 1 |
| | 141-6-132T-63303 | Individual carton | 1 |
| | 141-6-411T-71202 | Instruction bookletä | 1 |
| | 123-6-453R-00100 | Inspection sheet | 2 |
| | 141-6-472T-05602 | Caution label, Voltage indicate | 1 |
| | | Polyethylene bag 400 x 550mm, Set | 1 |
| | | Polyethylene bag 200 x 350mm, Inst B | 1 |
| | 141-6-415T-12100 | Notice, Swedish | 1 |
| **ACCESSORIES** | | | |
| | 4-241T-11171 | Pl ssette tape C-12 | 1 |
| | 4-243T-77900 | Power supply cord | 1 |
| | 4-236T-09700 | Plug, Eraser | 1 |
| **CABINET** | | | |
| | 141-0-111T-248912 | Cabinet assembly | 1 |
| | 141-0-124T-117910 | Top lid assembly | 1 |
| | 141-0-126T-156914 | Back lid assembly | 1 |
| | 141-0-128T-08291 | Battery lid assembly | 1 |
| | 141-2-851T-87900 | Coil spring, Top lid opener | 2 |
| | 141-2-751T-46200 | Shaft, Top lid fulcrum | 1 |
| | 141-2-741T-78100 | Lever, EJECT | 1 |
| | 141-2-161T-25000 | Push button, DL | 1 |
| | 123-2-472R-11100 | Lug, Rod antenna | 1 |
| | 141-2-157T-21100 | Inlay, Mechanism button STOP/REW/ PLAY/F.FWD | 4 |
| | 141-2-157T-21101 | Inlay, REC | 1 |
| | 141-2-157T-21200 | Inlay, PAUSE | 1 |
| | 141-2-741T-85600 | Lever, Chrome select | 1 |
| | 141-2-851T-93600 | Coil spring, Chrome select | 1 |
| | 141-0-163T-27191 | Rotary knob assembly, Tuning | 1 |
| | 141-2-163T-27200 | Rotary knob, Main VR | 1 |
| | 141-2-163T-27300 | Rotary knob, TONE Woofer Tweeter | 3 |
| | 141-2-134T-07500 | Head cover | 1 |
| | 141-2-163T-32000 | Rotary knob, Fine tuning | 1 |
| | 141-6-479T-16800 | Label, FTZ No. | 1 |
| **CHASSIS** | | | |
| | 141-0-311T-194911 | Chassis assembly | 1 |
| | 141-0-566T-02600 | Tuning shaft assembly | 1 |
| | 123-2-415R-10100 | Nut, Tuning shaft mtg. | 1 |
| | 141-2-853T-39400 | Plate spring, REC select | 1 |
| | 141-2-851T-06300 | Coil spring, Rope | 1 |
| | 141-2-538T-03900 | Drum, VC mtg. | 1 |
| | 141-2-425T-00200 | Hexagon screw, VC mtg. | 1 |
| | | Dial rope 0.5 x 1200mm | 1 |
| | 141-2-146T-05702 | Dial scale | 1 |

| Key No. | Part No. | Description | Q'ty |
|---|---|---|---|
| **CHASSIS** | | | |
| | 141-2-245T-00900 | Back plate | 1 |
| | 141-2-135T-39900 | Cover, Dial scale mtg. | 1 |
| | 141-0-511T-01900 | Pointer assembly | 1 |
| | 141-0-747T-12691 | Bracket assembly, RADIO ON/OFF select | 1 |
| | 123-2-445R-01400 | Cushion ring, PL mtg. | 1 |
| | 141-2-385T-02200 | Bracket, MIC mtg. | 1 |
| | 141-2-365T-32300 | Bracket, Micro switch mtg. | 1 |
| | 141-2-853T-43100 | Plate spring, Bracket mtg. | 1 |
| | 123-2-472R-00400 | Lug | 2 |
| | 141-2-853T-44900 | Plate spring, Bracket mtg. | 1 |
| | 141-2-337T-01600 | Ribbon, Battery take up | 1 |
| | | Fiber washer 4 x 10 x 1mm, Ribbon mtg. | 1 |
| | 141-2-322T-13900 | Shield plate, P.C.B. mtg. | 1 |
| | 123-2-472R-00600 | Lug, PT mtg. | 1 |
| | 141-2-241T-14300 | Veil, Switch mtg. | 2 |
| | | Rubber cushion 3.3 x 8 x 1mm, Mechanism | 3 |
| | 141-2-421T-12300 | Special screw, Slide mtg. | 2 |
| | 141-2-731T-39400 | Slide, Radio ON/OFF select | 1 |
| | 141-6-479T-11800 | Label, Fuse | 1 |
| **ELECTRICAL PARTS** | | | |
| | | **AMP** | |
| | 4-511T-06400 | Meter | 1 |
| | 4-151T-20200 | Speaker, Woofer 16cm 8 ohms | 1 |
| | 4-151T-17800 | Speaker, Tweeter 5cm 8 ohms | 1 |
| | 4-153T-09500 | Condenser microphone | 1 |
| | 4-251T-51200 | Power transformer 115/230V | 1 |
| S731,732 | 4-231T-50700 | Switch, Dial lamp & Batt. | 1 |
| PL701 | 4-612T-06974 | Pilot lamp, Dial 100mA/6V | 1 |
| | 4-235T-12171 | Socket, Car battery | 1 |
| | 4-231T-37604 | Switch, Voltage select | 1 |
| | 141-2-135T-32271 | Cover, AC socket | 1 |
| | 4-235T-26900 | Socket, AC input | 1 |
| | 4-234T-03100 | Fuse 1.25A | 1 |
| | 141-2-383T-01500 | Fuse holder | 1 |
| S761 | 4-231T-506911 | Switch assembly | 1 |
| | 4-243T-12805 | Lead, SP UL1007 360mm Orange & Yellow | 2 |
| | 4-231T-39771 | Switch, Normal/$CrO_2$ select | 2 |
| | | **TUNER** | |
| | 4-244T-01100 | Rod antenna | 1 |
| | 4-243T-12803 | Lead, Rod antenna | 1 |
| VC5 | 4-224R-20100 | Fine tuning | 1 |

| Key No. | Part No. | Description | Q'ty |
|---|---|---|---|
| **PRINTED CIRCUIT BOARD ASSY (AMP)** | | | |
| | 4-226T-75892 | Printed circuit board assembly, AMP | 1 |
| | 4-254T-13600 | Output transformer, Woofer AMP | 1 |
| | 4-254T-13700 | Input transformer, Woofer AMP: | 1 |
| | 4-254R-02300 | Input transformer, Tweeter | 1 |
| L701 | 4-252T-02300 | Choke coil 15mH, Bias trap | 1 |
| L703 | 4-253T-04200 | Choke coil 6.8mH, High boost | 1 |
| L705 | 4-252T-02200 | Choke coil 100μH, Motor | 1 |
| SVR701 | 4-222R-60900 | Semi-variable resistor 50KB, Bias adjust | 1 |
| S701 ~ S712 | 4-231T-21572 | R/P switch | 1 |
| S801 ~ S806 | 4-231T-51500 | Switch, Radio/Tape/Sleep | 1 |
| | 4-235T-33671 | Socket assembly, Earphone AUX. MIC. | 1 |
| | 4-231T-42100 | Beat cancel switch | 1 |
| | 141-2-461T-02800 | Pipe, L703 & L705 mtg. | 2 |
| | 141-2-382T-03071 | Terminal tip, SP lead terminal | 2 |
| | 141-2-368T-08900 | Heat sink | 1 |
| | | Fiber washer 3.3 x 8 x 0.5mm, Heat sink | 1 |
| Q701 | | Transistor 2SC1571 | 1 |
| Q704 | | Transistor 2SC536AUD | 1 |
| Q705,706 | | Transistor 2SD400 | 2 |
| Q707,708 | | Transistor 2SC1568 | 2 |
| Q709 | | Transistor 2SD400 | 1 |
| IC701 | | IC BA313 | 1 |
| IC702 | | IC BA318 | 1 |
| IC703 | | IC BA306 | 1 |
| D701,702 | | Diode 1S188 FM-1 | 2 |
| D703,704 | | Diode 1S188 AM | 2 |
| D705 | | Diode DS131 | 1 |
| D706 | | Diode DS132 | 1 |
| D707,708 709 | | Diode MA-26 | 3 |
| | | **CAPACITORS** | |
| C701,733 | | Electrolytic 0.1μF +40 −20%, 10WV | 2 |
| C737,761 769 | | Electrblytic 2.2μF +100 −10%, 25WV | 3 |
| C703,706 719,736 | | Electrolytic 4.7μF +100 −10%, 16WV | 4 |
| C725,726 743,763 778 | | Electrolytic 10μF +100 −10% 16WV | 5 |
| C714 | | Electrolytic 22μF +100 −10% 10WV | 1 |
| C724 | | Electrolytic 33μF +100 −10% 6.3WV | 1 |
| C709 | | Electrolytic 100μF +100 −10% 10WV | 1 |
| C745 | | Electrolytic 220μF +100 −10%, 6.3WV | 1 |
| C710 | | Electrolytic 220μF +100 −10% 10WV | 1 |
| C739,753 755 | | Electrolytic 220μF +100 −10% 16WV | 3 |
| C760 | | Electrolytic 330μF +100 −10% 16WV | 1 |
| C727,738 | | Electrolytic 470μF +100 −10% 10WV | 2 |
| C746,747 | | Electrolytic 1000μF +100 −10% 16WV | 2 |
| C754 | | Electrolytic 2200μF +100 −10% 16WV | 1 |
| C768 | | Mylar 470pF ±20% 50WV | 1 |
| C716 | | Mylar 680pF ±10% 50WV | 1 |
| C712 | | Mylar 680pF ±20% 50WV | 1 |
| C718 | | Mylar 820pF ±20% 50WV | 1 |
| C717 | | Mylar 0.0015μF ±20% 50WV | 1 |
| C748,749 751,752 | | Mylar 0.0068μF ±20% 50WV | 4 |
| C722,779 780 | | Mylar 0.01μF ±20% 50WV | 3 |
| C720 | | Mylar 0.018μF ±10% 50WV | 1 |
| C762,774 | | Mylar 0.022μF ±20% 50WV | 2 |
| C702 | | Mylar 0.068μF ±20% 50WV | 1 |
| C767 | | Mylar 0.0082μF ±20% 50WV | 1 |
| C771 | | Mylar or Ceramic 0.0022μF ±20% 50WV | 1 |
| C704 | | Mylar or Ceramic 0.0047μF ±20% 50WV | 1 |
| C723 | | Ceramic 10pF ±10% 50WV | 1 |
| C705,715 773 | | Ceramic 100pF ±10% 50WV | 1 |
| C713 | | Ceramic 150pF ±10% 50WV | 1 |
| C772 | | Ceramic, 330pF ±20% 50WV | 1 |
| C756,757 758,759 | | Ceramic 0.04μF +80 −20% 50WV | 4 |
| C790 | | Ceramic 120pF ±10% 50WV | 1 |
| C750 | | Mylar 0.047μF ±20% 50WV | 1 |

| Key No. | Part No. | Description | Q'ty |
|---|---|---|---|
| **PRINTED CIRCUIT BOARD ASSY (AMP)** | | | |
| | | **RESISTORS** | |
| R762 | | Winding wire 0.5 ohm ±10% 1/2W | 1 |
| R777,778 | | Carbon 1 ohm ±10% 1/4W | 2 |
| R771 | | Carbon 6.8 ohm ±10% 1/4W | 1 |
| R714 | | Carbon 10 ohm ±10% 1/4W | 1 |
| R758 | | Carbon 15 ohm ±10% 1/4W | 1 |
| R763 | | Carbon or Solid 18 ohm±10% 1/2W | 1 |
| R780 | | Carbon or Solid 27 ohm±10% 1/2W | 1 |
| R789 | | Carbon 39 ohm ±10% 1/4W | 1 |
| R766 | | Metal oxide film 47 ohm±10% 1W | 1 |
| R759 | | Carbon or Solid 100 ohm±10% 1/2W | 1 |
| R706 | | Carbon 150 ohm ±10% 1/4W | 1 |
| R723 | | Carbon 270 ohm ±10% 1/4W | 1 |
| R765 | | Carbon or Solid 330 ohm±10% 1/2W | 1 |
| R727,779, 733 | | Carbon 390 ohm ±10% 1/4W | 3 |
| R755,761 774,776 | | Carbon 470 ohm ±10% 1/4W | 4 |
| R781 | | Carbon 560 ohm ±10% 1/4W | 1 |
| R723,719 773,775 | | Carbon 680 ohm ±10% 1/4W | 4 |
| R710,756 784 | | Carbon 1K ohm ±10% 1/4W | 3 |
| R785 | | Carbon 100 ohm ±10% 1/4W | 1 |
| R794 | | Carbon 120 ohm ±10% 1/4W | 1 |
| R731,760 788 | | Carbon 1.5K ohm ±10% 1/4W | 3 |
| R732,782 | | Carbon 2.2K ohm ±10% 1/4W | 2 |
| R720 | | Carbon 2.7K ohm ±10% 1/4W | 1 |
| R721,730, 701,736 | | Carbon 3.3K ohm ±10% 1/4W | 4 |
| R707,717 722,772 | | Carbon 3.9K ohm ±10% 1/4W | 4 |
| R797 | | Carbon 4.7K ohm ±10% 1/4W | 1 |
| R713 | | Carbon 5.6K ohm ±10% 1/4W | 1 |
| R712,718 726,702 | | Carbon 6.8K ohm ±10% 1/4W | 4 |
| R705,708 | | Carbon 10K ohm ±10% 1/4W | 2 |
| R709 | | Carbon 15K ohm ±10% 1/4W | 1 |
| R734,796 | | Carbon 18K ohm ±10% 1/4W | 2 |
| R728,735 | | Carbon 22K ohm ±10% 1/4W | 2 |
| R770 | | Carbon 27K ohm ±10% 1/4W | 1 |
| R724 | | Carbon 150K ohm ±10% 1/4W | 1 |
| R729 | | Carbon 39K ohm ±10% 1/4W | 1 |
| R716 | | Carbon 56K ohm ±10% 1/4W | 1 |
| R783,767 | | Carbon 68K ohm ±10% 1/4W | 2 |
| R715 769 | | Carbon 100K ohm ±10% 1/4W | 2 |
| R704 | | Carbon 1M ohm ±10% 1/4W | 1 |
| **PRINTED CIRCUIT BOARD ASSY (VR)** | | | |
| | 4-226T-844910 | Printed circuit board assembly, VR | 1 |
| S781,782 | 4-231T-478911 | Switch assembly, Loudness, AFC | 2 |
| VR704 | 4-222T-43571 | Variable resistor 50KA, Tweeter | 1 |
| VR701,703 | 4-222T-43671 | Variablre resistor 50KA,Woofer and TONE | 2 |
| VR702 | 4-222T-43771 | Variable resistor 50KB, Volume | 1 |
| | 4-258T-13101 | OSC pack | 1 |
| Q702,703 | | Transistor 2SC1571 | 2 |
| | | **CAPACITORS** | |
| C728,731 740,742 | | Electrolytic 4.7μF +100 −10% 16WV | 4 |
| C733 | | Electrolytic 0.1μF +40 −20% 10WV | 1 |
| C729 | | Electrolytic 100μF +100 −10% 6.3WV | 1 |
| C735 | | Mylar 0.0068μF ±20% 50WV | 1 |
| C732 | | Mylar 0.047μF ±20% 50WV | 1 |
| C734,770 | | Mylar 0.068μF ±20% 50WV | 2 |
| C730,741 | | Ceramic 100pF ±10% 50WV | 2 |
| C770 | | Mylar 0,082μF ±20% 50WV | 1 |
| | | **RESISTORS** | |
| R740,750 | | Carbon 150 ohm ±10% 1/4W | 2 |
| R739 | | Carbon 390 ohm ±10% 1/4W | 1 |
| R751 | | Carbon 1.5K ohm ±10% 1/4W | 1 |
| R742,745 | | Carbon 2.2K ohm ±10% 1/4W | 2 |

| Key No. | Part No. | Description | Q'ty |
|---|---|---|---|
| **PRINTED CIRCUIT BOARD ASSY (VR)** | | | |
| R738,743 754 | | Carbon 2.7K ohm ±10% 1/4W | 3 |
| R753 | | Carbon 3.3K ohm ±10% 1/4W | 1 |
| R741 | | Carbon 4.7K ohm ±10% 1/4W | 1 |
| R744,752 | | Carbon 6.8K ohm ±10% 1/4W | 2 |
| R791 | | Carbon 27K ohm ±10% 1/4W | 1 |
| R749 | | Carbon 270K ohm ±10% 1/4W | 1 |
| R737 | | Carbon 820K ohm ±10% 1/4W | 1 |
| **PRINTED CIRCUIT BOARD ASSY (TUNER)** | | | |
| | 4-226T-840913 | Printed circuit board assembly, TUNER | 1 |
| | 4-226T-88300 | Printed circuit board, SWITCH | 1 |
| | 141-2-382T-03000 | Terminal, TP1,2 & Fine tuning | 4 |
| | 4-237T-00100 | Terminal, TP3,4 & Other connections | 10 |
| | 123-2-471R-10900 | Core, Q103 emitter | 1 |
| | 123-2-471R-10400 | Core, Q104 emitter | 1 |
| L102 | 4-265R-00300 | V.H.F coil | 1 |
| L103,114 | 4-265R-12700 | V.H.F coil | 2 |
| L104 | 4-265T-02600 | V.H.F coil | 1 |
| L105 | 4-252T-05900 | Choke coil 18μH | 1 |
| L106 | 4-252T-06300 | Choke coil 150μH | 1 |
| L107 | 4-253R-11100 | Choke coil 1μH | 1 |
| L109 | 4-257R-26930 | Antenna coil | 1 |
| L110 | 4-257T-16000 | Antenna coil | 1 |
| L111-1.2 | 4-257T-15901 | Antenna coil assembly | 1 |
| L113 | 4-265R-00600 | V.H.F coil | 1 |
| L115 | 4-258T-07500 | OSC coil | 1 |
| L116 | 4-258T-07600 | OSC coil | 1 |
| L117 | 4-258T-05640 | OSC coil | 1 |
| L118 | 4-258T-05540 | OSC coil | 1 |
| L119 | 4-265R-05000 | V.H.F coil | 1 |
| L120 | 4-265R-11200 | V.H.F coil | 1 |
| VC1-4 CT1-4 | 4-224T-04600 | Variable Capacitor 20 – 335pF | 1 |
| CT5,6 7,8 | 4-224R-01400 or 4-224R-01471 | Trimmer 8pF | 4 |
| CT9,10 | 4-224R-01600 | Trimmer 16pF | 2 |
| T301 | 4-256T-05140 | I.F.T, FM gray | 1 |
| T302 | 4-256T-04540 | I.F.T, FM pink | 1 |
| T303 | 4-256T-04040 | I.F.T, FM sky blue | 1 |
| T304 | 4-256T-80300 | I.F.T, AM 460 Hz | 1 |
| T305 | 4-256T-03740 | I.F.T, AM black | 1 |
| | 4-253T-09200 | R.F filter FF88 108M, B.P.F | 1 |
| CF301,302 | 4-256T-80400 red<br>4-256T-80471 blue<br>4-256T-80472 orange<br>4-256T-80473 black<br>4-256T-80474 white | Pan head screw 2.6 x 4mm<br>I.F filter SFE10.7M | 2<br>2 |
| S1 | 4-231T-55791 | Push switch assembly, Band select | 1 |
| SVR301 | 4-222R-61100 | Variable resistor 5KB | 1 |
| | 141-2-322T-18900 | Shield plate, P.C.B mtg. | 1 |
| | 123-2-445R-00200 | Rubber cushion, VC mtg. | 1 |
| | 141-2-322T-29800 | Shield plate, P.C.B mtg. | 1 |
| | 141-2-322T-29900 | Shield plate, P.C.B mtg. | 1 |
| Q101,302 304 | | Transistor 2SC930 | 3 |
| Q102,103 301,303 305 | | Transistor 2SC930 | 5 |
| Q104 | | Transistor 2SC929 | 1 |
| D101,303 304 | | Diode 1S188 FM | 3 |
| D102 | | Diode 1S553 | 1 |
| D103,104 | | Diode 1S2473 | 2 |
| D105 | | Diode DS442 | 1 |
| D106,301 302 | | Diode 1S188 AM | 3 |
| D305 | | Diode MV-11T | 1 |
| D306,307 | | Diode 1S188 FM-1 | 2 |
| D308 | | Diode YZ047A | 1 |

| Key No. | Part No. | Description | Q'ty |
|---|---|---|---|
| **PRINTED CIRCUIT BOARD ASSY (TUNER)** | | | |
| | | **CAPACITORS** | |
| C316,333 | | Electrolytic 0.1μF +40 –20% 10WV | 2 |
| C123 | | Electrolytic 0.47μF +40 –20% 10WV | 1 |
| C322,328 | | Electrolytic 4.7μF +150 –10% 25WV | 2 |
| C308 | | Electrolytic 10μF +100 –10% 16WV | 1 |
| C334 | | Electrolytic 330μF +100 –10% 6.3WV | 1 |
| C340 | | Electrolytic 0.1μF +40 –20% 10WV or Semi-conductor ceramic 0.1μF +80 –20% 12WV | 1 |
| C132 | | Styrol 180pF ±5% 50WV | 1 |
| C131 | | Styrol 350pF ±5% 50WV | 1 |
| C130 | | Styrol 1300pF ±5% 50WV | 1 |
| C129 | | Styrol 4300pF ±10% 50WV | 1 |
| C310 | | Mylar 0.001μF ±20% 50WV | 1 |
| C133,301 | | Mylar 0.0022μF ±20% 50WV | 2 |
| C127,134 | | Mylar 0.0047μF ±20% 50WV | 2 |
| C135 | | Mylar 0.0068μF ±20% 50WV | 1 |
| C115,307 335 | | Mylar 0.022μF ±20% 50WV | 3 |
| C137,314,315 | | Mylar 0.033μF ±20% 50WV | 3 |
| C323 | | Ceramic 1pF ±0.25pF 50WV | 1 |
| C312 | | Ceramic 2pF ±0.25pF 50WV | 1 |
| C108 | | Ceramic 3pF ±0.25pF 50WV | 1 |
| C109,116 142,145 336 | | Ceramic 5pF ±0.5pF 50WV | 5 |
| C121 | | Ceramic 6pF ±0.5pF 50WV | 1 |
| C107 | | Ceramic 7pF ±0.5pF 50WV | 1 |
| C126 | | Ceramic 12pF ±5% 50WV | 1 |
| C124,125 128 | | Ceramic 15pF ±10% 50WV | 3 |
| C106,120 | | Ceramic 18pF ±5% 50WV | 2 |
| C143 | | Ceramic 30pF ±10% 50WV | 1 |
| C325 | | Ceramic 33pF ±10% 50WV | 1 |
| C318 | | Ceramic 39pF ±10% 50WV | 1 |
| C138 | | Ceramic 70pF ±5% 50WV | 1 |
| C111 | | Ceramic 470pF ±20% 50WV | 1 |
| C327,329 337 | | Ceramic 0.001μF 20% 50WV | 3 |
| C330 | | Mylar 0.01μF ±20% 50WV | 1 |
| C102,103,112 117,118,119 303,306,317 319,324 | | Ceramic 0.01μF +80 –20% 50WV | 11 |
| C113,122,302 304,305,309 313,311,338 339 | | Ceramic 0.022μF +80 –20% 50WV | 10 |
| C104,105,110 114,139,320 321,326,331 | | Ceramic 0.04μF +80 –20% 50WV | 9 |
| | | **RESISTORS** | |
| R111,118 121 | | Carbon 10 ohm ±10% 1/4W | 3 |
| R129,341 | | Carbon 15 ohm ±10% 1/4W | 2 |
| R120,342 | | Carbon 56 ohm ±10% 1/4W | 2 |
| R340 | | Carbon 82 ohm ±10% 1/4W | 1 |
| R103,104,126 301,305,307 310,318,325 | | Carbon 100 ohm ±10% 1/4W | 9 |
| R122 | | Carbon 180 ohm ±10% 1/4W | 1 |
| R320 | | Carbon 220 ohm ±10% 1/4W | 1 |
| R330,332 | | Carbon 270 ohm ±10% 1/4W | 2 |
| R115,302 314,329 | | Carbon 330 ohm ±10% 1/4W | 4 |
| R303,308 | | Carbon 390 ohm ±10% 1/4W | 2 |
| R106 | | Carbon 470 ohm ±10% 1/4W | 1 |
| R101,317 | | Carbon 560 ohm ±10% 1/4W | 2 |
| R323 | | Carbon 820 ohm ±10% 1/4W | 1 |
| R107,126,304 309,312,321 322,333,334 | | Carbon 1K ohm ±10% 1/4W | 9 |
| R125,326 | | Carbon 1.2K ohm ±10% 1/4W | 2 |
| R113,114 130 | | Carbon 1.5K ohm ±10% 1/4W | 3 |
| R116 | | Carbon 1.8K ohm ±10% 1/4W | 1 |

## PARTS LIST

| Key No. | Part No. | Description | Q'ty |
|---|---|---|---|
| **PRINTED CIRCUIT BOARD ASSY (TUNER)** | | | |
| R331,338 | | Carbon 2.2K ohm ±10% 1/4W | 2 |
| R128 | | Carbon 3.3K ohm ±10% 1/4W | 1 |
| R316,335 336 | | Carbon 5.6K ohm ±10% 1/4W | 3 |
| R117,315 328,339 | | Carbon 10K ohm ±10% 1/4W | 4 |
| R324 | | Carbon 12K ohm ±10% 1/4W | 1 |
| R102,105,108 112,306,311 319,327 | | Carbon 15K ohm ±10% 1/4W | 8 |
| R119 | | Carbon 18K ohm ±10% 1/4W | 1 |
| R124 | | Carbon 33K ohm ±10% 1/4W | 1 |
| R313 | | Carbon 39K ohm ±10% 1/4W | 1 |
| R109,110 | | Carbon 100K ohm ±10% 1/4W | 2 |
| R337 | | Carbon 1M ohm ±10% 1/4W | 1 |
| **MECHANISM** | | | |
| 1 | 141-0-311T-191911 | Chassis assembly | 1 |
| 2 | 141-2-853T-23400 | Plate spring, Cassette pressure | 1 |
| 3 | 4-231T-35002 | Switch, Power | 3 |
| 4 | 141-0-531T-04491 | Reel plate assembly, Take up | 1 |
| 5 | 123-2-472R-00600 | Lug, Earth lead | 1 |
| 6 | 141-0-531T-04300 | Reel plate assembly, Left | 1 |
| 7 | 141-2-811T-04400 | Counter | 1 |
| 8 | 141-2-851T-62900 | Coil spring, Back tension | 1 |
| 9 | 141-2-564T-11000 | Belt, Counter drive | 1 |
| 11 | 4-527T-08300 | DC motor | 1 |
| 12 | 141-0-661T-66191 | Motor pulley assembly | 1 |
| 13 | 141-2-378T-07400 | Bracket, Motor mtg. | 1 |
| 14 | 141-2-421T-16000 | Special screw, Motor mtg. | 3 |
| 15 | 141-2-445T-11801 | Rubber cushion, Motor mtg. | 3 |
| 16 | 141-2-371T-06600 | Bracket, Transformer mtg. | 1 |
| 17 | 141-0-521T-05000 or 141-0-521T-05001 | Flywheel assembly | 1 |
| 18 | 141-0-524T-02400 | Bracket assembly, Flywheel | 1 |
| 19 | 141-2-457T-04300 | Special washer, Flywheel shaft mtg | 1 |
| 20 | 141-2-564T-15400 | Main belt | 1 |
| 21 | 141-0-731T-10300 | Slide assembly, Head slide | 1 |
| 22 | 141-2-853T-38500 | Plate spring, Head slide pressure | 1 |
| 23 | 141-0-545T-00700 | Lever assembly, Pinch roller mtg. | 1 |
| 24 | 141-2-852T-09400 | Wire spring, Lever (23) pressure | 1 |
| 25 | 141-0-721T-033912 | Lever shut off assembly, Auto stop | 1 |
| 26 | 4-242T-18700 | R/P head | 1 |
| 27 | 4-242T-18602 | E head | 1 |
| 28 | 141-2-461T-17200 | Pipe, E head mtg. | 1 |
| 29 | 141-2-851T-49700 | Coil spring, R/P head adjustment | 1 |
| 30 | 123-2-472R-00200 | Lug, Head earth | 1 |
| 31 | 141-2-472T-02200 | Lug, E head lead fixer | 2 |
| 32 | 141-2-851T-63100 | Coil spring, PLAY slide connection | 1 |
| 33 | 141-0-741T-09401 | Lever assembly, REW & F.FWD | 1 |
| 34 | 141-0-741T-47291 | Lever assembly, F.FWD roller | 1 |
| 35 | 141-2-851T-63800 | Coil spring, Lever (34) returning Lever (37) pressure F.FWD slide (48) returning | 3 |
| 36 | 141-2-564T-13500 | Belt, F.FWD & REW | 1 |
| 37 | 141-0-741T-18000 | Lever assembly, Take up roller | 1 |
| 38 | 141-2-851T-63900 | Coil spring, REC button returning | 1 |
| 39 | 141-0-741T-15100 | Lever assembly, REW & F.FWD | 1 |
| 40 | 4-231T-35002 | Switch, F.FWD & REW power | 1 |
| 41 | 141-2-365T-27800 | Bracket, Switch (40) mtg. | 1 |
| 42 | 141-0-731T-09800 | Slide assembly, PAUSE button | 1 |
| 43 | 141-2-851T-55400 | Coil spring, PAUSE button returning | 1 |
| 44 | 141-2-731T-24800 | Slide, REC button | 1 |
| 45 | 141-2-731T-34200 | Slide, REW button | 1 |
| 46 | 141-0-731T-05700 | Slide assembly, PLAY button | 1 |
| 47 | 141-2-851T-58700 | Coil spring, PLAY button returning | 1 |
| 48 | 141-2-731T-34401 | Slide, F.FWD button | 1 |
| 49 | 141-0-731T-05800 | Slide assembly, STOP button | 1 |
| 50 | 141-2-741T-79700 | Lever, Cassette up | 1 |
| 51 | 141-2-851T-56100 | Coil spring, Cassette up lever (50) Slide (49) lever Lever (63) & Lever (61) returning | 4 |
| 52 | 123-2-472R-00400 | Lug, Flywheel earth lead | 1 |
| 53 | 141-2-683T-26000 | Ring, Cue & Review slide | 1 |
| 54 | 141-2-161T-24600 | Push button, Except PAUSE button | 5 |
| 55 | 141-2-161T-24700 | Push button, PAUSE button | 1 |
| 56 | 141-0-731T-00605 | Slide assembly, Lock slide | 1 |

| Key No. | Part No. | Description | Q'ty |
|---|---|---|---|
| **MECHANISM** | | | |
| 57 | 141-2-851T-77000 | Coil spring, Lever (72) returning | 1 |
| 58 | 141-2-741T-47600 | Lever, Record safety lock | 1 |
| 59 | 141-2-851T-45400 | Coil Spring, Lever (58) returning | 1 |
| 60 | 141-0-741T-477911 | Lever assembly, Brake | 1 |
| 61 | 141-0-741T-15300 | Lever assembly, PAUSE | 1 |
| 62 | 141-2-683T-25800 | Ring, Lever (61) fixer | 1 |
| 63 | 141-0-741T-15400 | Lever assembly, Head slide operation | 1 |
| 64 | 141-2-741T-72600 | Lever, REW & F.FWD switch operation | 1 |
| 65 | 141-2-851T-28100 | Coil spring, Lever (64) returning | 1 |
| 66 | 141-2-614T-04700 | Lever, PAUSE (61) lock | 1 |
| 67 | 141-2-852T-27000 | Wire spring, Lever (66) returning | 1 |
| 68 | 141-0-737T-00400 | Bracket slide assembly | 1 |
| 69 | 141-2-851T-77500 | Coil spring, Lever shut off (25) returning | 1 |
| 70 | 141-2-821T-10200 | Tape guide | 1 |
| 71 | 141-2-851T-73500 | Coil spring, STOP button returning | 1 |
| 72 | 141-2-741T-79600 | Lever, Auto stop | 1 |
| 73 | 131-2-851T-64000 | Coil spring, Lock slide (56) returning | 1 |
| 74 | 141-2-613T-03000 | Frame, Push button guide | 1 |
| 75 | 141-2-613T-03100 | Frame, Push button guide | 1 |
| 76 | 4-264T-06191 | Solenoid assembly | 1 |
| 77 | 4-231T-50900 | Switch, MEMORY REW "ON" | 1 |
| 78 | 4-231T-52201 | Switch, PLAY – RADIO "OFF" | 1 |
| 79 | 141-2-853T-40800 | Plate spring, Right reel back tension | 1 |
| 80 | 141-2-851T-31500 | Coil spring, REW button returning | 1 |
| 81 | 141-2-461T-24600 or 141-2-461T-24601 | Pipe, Take up roller lever (37) mtg. | 1 |
| 82 | 141-2-465T-11900 | Stopper, Noise prevention | 1 |
| 83 | 141-2-322T-27100 | Shield plate, Motor noise prevention | 1 |
| **MECHANISM SCREWS** | | | |
| Y1 | | Pan head screw 2 x 2mm | 1 |
| Y2 | | Pan head screw 2 x 6mm | 2 |
| Y3 | | Pan head screw 2 x 8mm | 1 |
| Y4 | | Pan head screw 2 x 12mm | 2 |
| Y5 | | Flat head screw 3 x 6mm | 2 |
| Y6 | | Tapping screw 2.3 x 6mm | 8 |
| Y7 | | Tapping screw 2.3 x 8mm | 3 |
| Y8 | | Tapping screw 3 x 6mm | 4 |
| Y9 | | Tapping screw 3 x 8mm | 3 |
| Y10 | | Tapping screw 3 x 12mm | 1 |
| Y11 | | Tapping screw 3 x 25mm | 2 |
| Y12 | | Flat head tapping screw 3 x 6mm | 1 |
| Y13 | | Binding head tapping screw 3 x 6mm | 1 |
| Y14 | | Washer 2.3 x 4.3 x 0.4mm | 4 |
| Y15 | | Washer 2.3 x 6 x 0.4mm | 3 |
| Y16 | | Washer 2.6 x 7.3 x 0.5mm | 1 |
| Y17 | | Washer 3 x 7.3 x 0.5mm | 1 |
| Y18 | | Washer 3 x 8 x 0.5mm | 2 |
| Y19 | | Washer 4 x 10 x 0.8mm | 1 |
| Y20 | | Spring washer 2mm | 3 |
| Y21 | | Internal tooth lock washer 2.6mm | 1 |
| Y22 | | External "E" ring 1.5mm | 2 |
| Y23 | | External "E" ring 2mm | 3 |
| Y24 | | External "E" ring 4mm | 1 |
| Y25 | | Graphite nylon washer 4 x 2.1 x 4 x 0.13mm | 2 |
| Y26 | | Graphite nylon washer 2.1 x 4 x 0.25mm | 2 |
| Y27 | | Graphite nylon washer 2.1 x 8.5 x 0.25mm | 1 |
| Y28 | | Graphite nylon washer 2.6 x 4.7 x 0.25mm | 1 |
| Y29 | | Graphite nylon washer 2.6 x 4.7 x 0.5mm | 1 |
| Y30 | | Graphite nylon washer 5.2 x 8 x 0.5mm | 1 |
| Y31 | | Steel ball 2mm | 4 |
| Y32 | | Fiber washer 3 x 8 x 0.5mm | 1 |
| Y33 | | Tapping screw with washer 3 x 6mm | 2 |
| Y34 | | Tapping screw with washer 3 x 8mm | 2 |
| Y35 | | Tapping screw with washer 3 x 10mm | 2 |
| Y37 | | Graphite nylon washer 5.2 x 8 x 0.13mm | 1 |
| Y38 | | Vinyl tube 2.5 x 14.5mm | 1 |



## EXPLODED VIEW

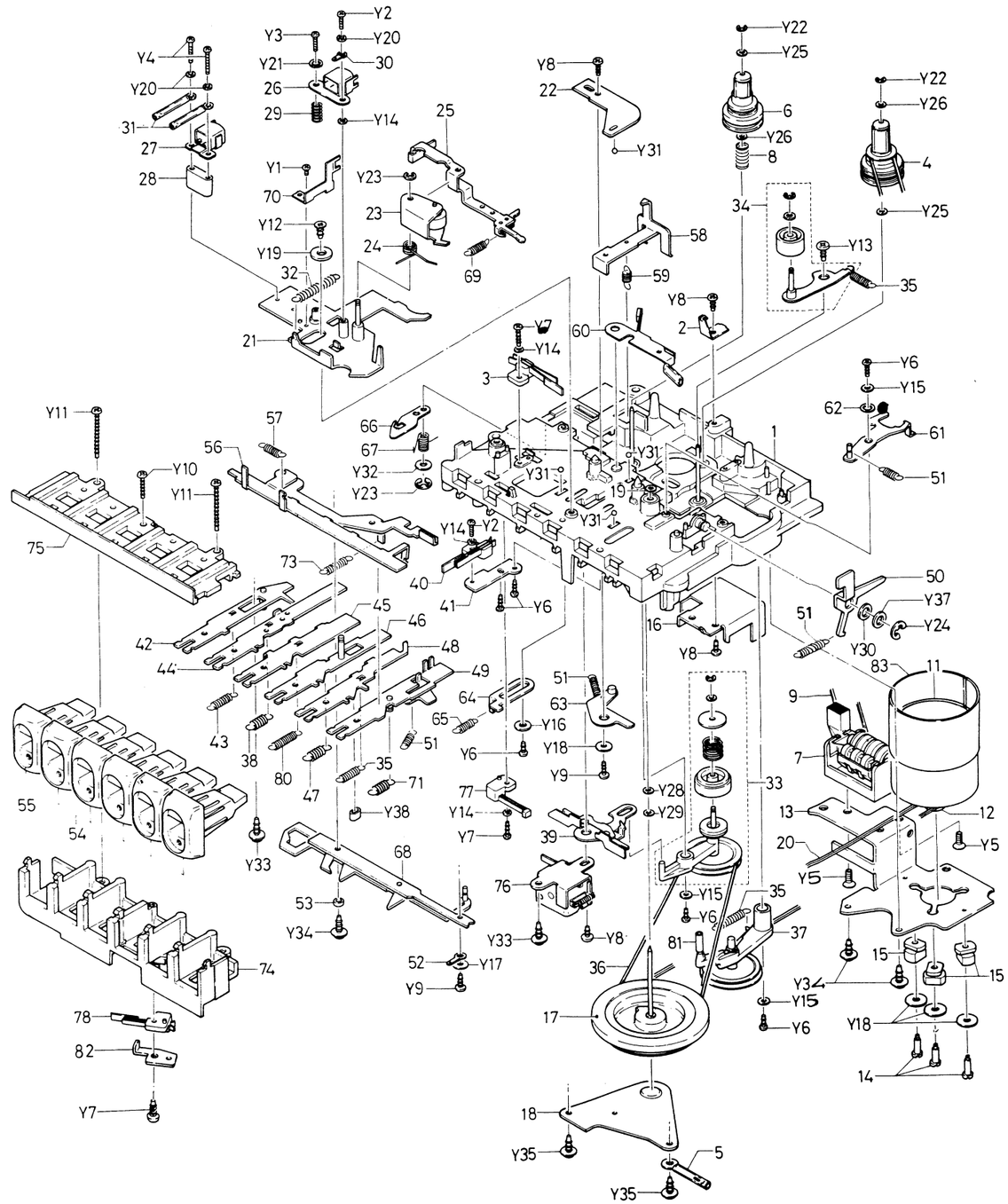

## SCHEMATIC DIAGRAM (TUNER)

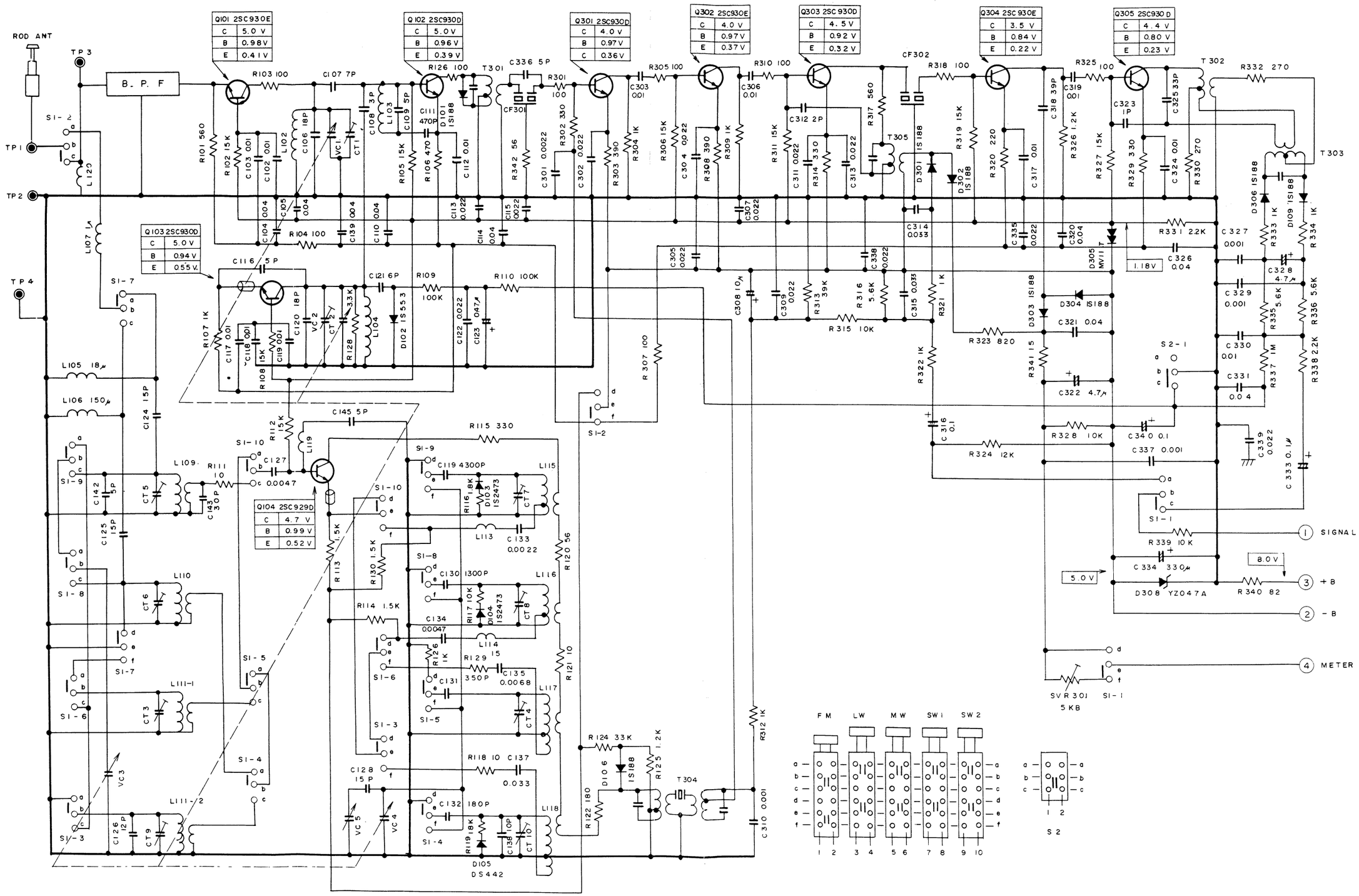

# WIRING DIAGRAM (TUNER)

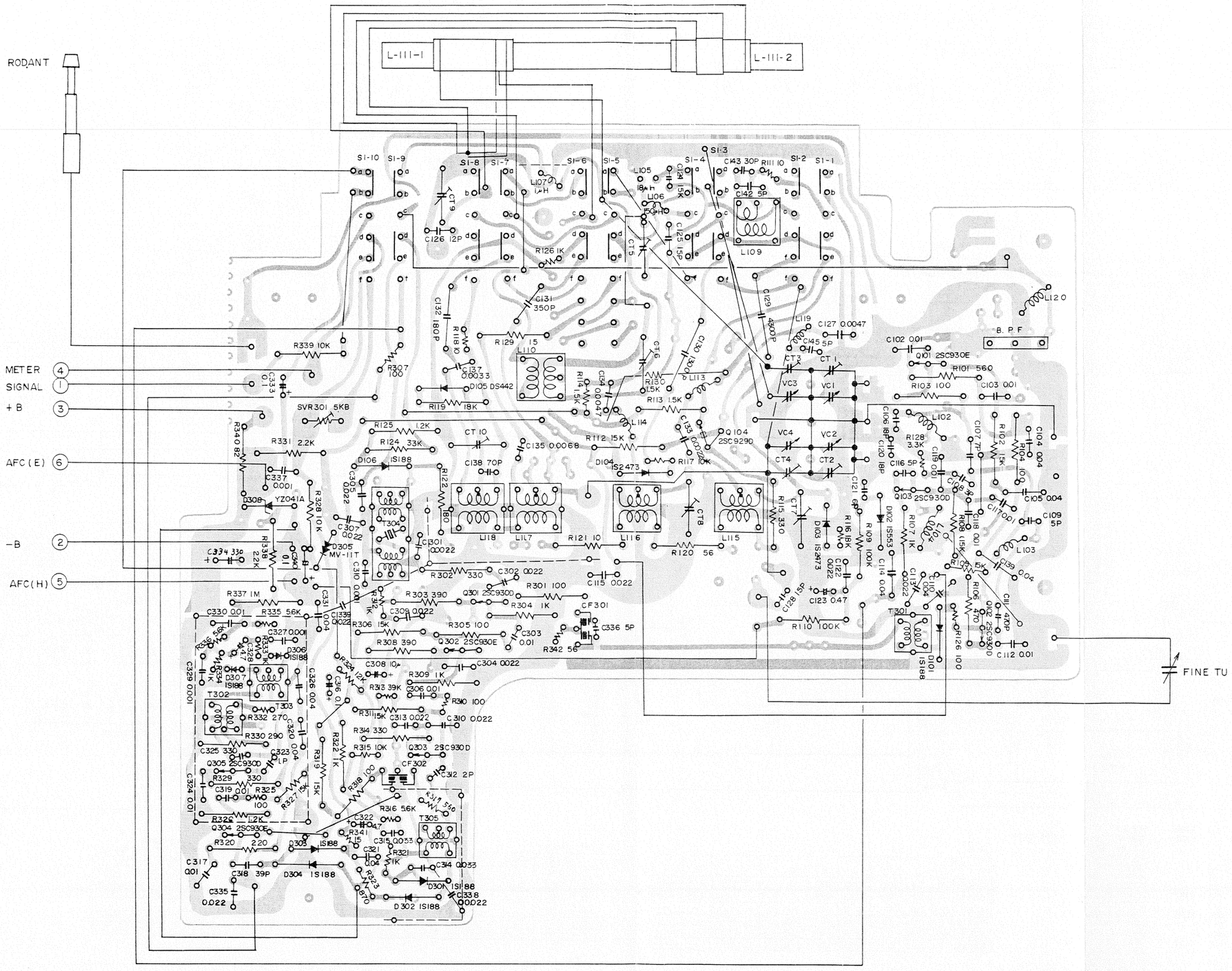

## SCHEMATIC DIAGRAM (AMPLIFIER)

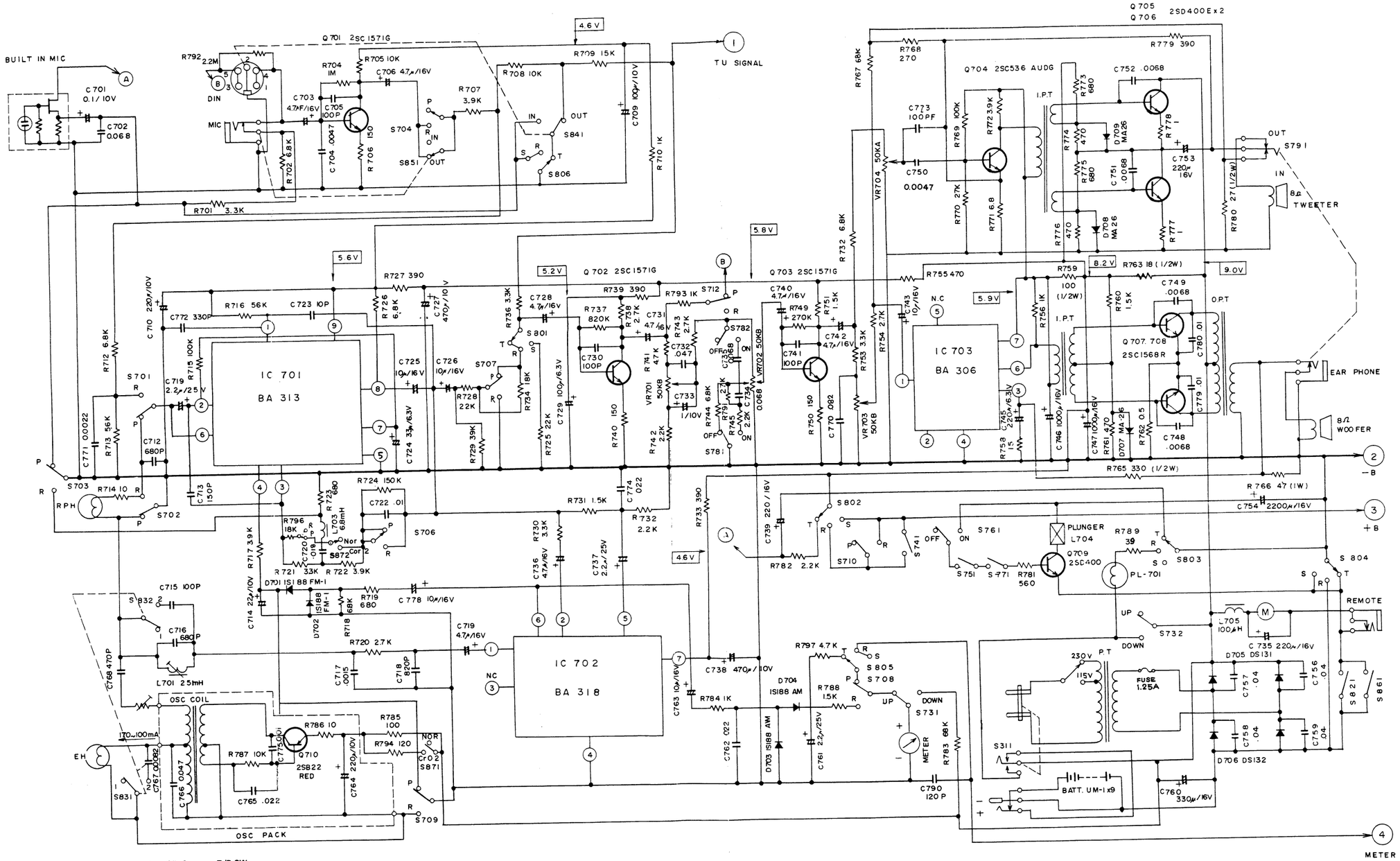


| | |
|---|---|
| S701 ~ S712 | ; R/P SW |
| S731 ~ S732 | ; DOWN AT DIAL LAMP & BATT METER "ON". |
| S741 | ; ON AT PLAY MODE. |
| S751 | ; ON AT REW MODE. |
| S761 | ; MEMORY SW. |
| S771 | ; COUNTER SW. |
| S781 ~ S782 | ; LOUDNESS SW. |
| S791 | ; EARPHONE JACK SW. |
| S801 ~ S806 | ; RADIO ON/OFF SW. |
| S811 | ; AC/DC SW. |
| S821 | ; ON AT PLAY. |
| S831 ~ S832 | ; BEAT CANCEL SW. |
| S841 | ; AUX JACK SW. |
| S851 | ; MIC JACK SW. |
| S861 | ; ON AT REW & F. FWD |
| S871 ~ S872 | ; TAPE SELECT SW (NORMAL POSITION) |

(1) IC

| NO | | 1 | 2 | 3 | 4 | 5 | 6 | 7 | 8 | 9 |
|---|---|---|---|---|---|---|---|---|---|---|
| IC701 | P | 2.4 | 0.6 | 0.02 | 0.05 | 0 | 0 | 1.05 | 1.75 | 4.85 |
| RA313 | R | 2.4 | 0.6 | 0.02 | 0.05 | 0 | 0 | 1.05 | 1.75 | 4.85 |
| IC702 | P | 2.2 | 1.5 | 0.75 | 0 | 0.6 | 2.5 | 4.7 | – | – |
| BA318 | R | 2.2 | 1.5 | 0.75 | 0 | 0.6 | 2.5 | 4.7 | – | – |
| IC703 | P | 0.65 | 0.1 | 0.65 | 0 | 1.95 | 5.2 | 5.9 | – | – |
| BA306 | R | 0.65 | 0.1 | 0.65 | 0 | 1.95 | 5.2 | 5.9 | – | – |

(2) Q701 ~ Q708

| | | Q701 | Q702 | Q703 | Q704 | Q705 | Q706 | Q707 | Q708 |
|---|---|---|---|---|---|---|---|---|---|
| P | B | 0.55 | 0.7 | 0.8 | 0.65 | 4.6 | 0.65 | 0.70 | 0.70 |
| | C | 1.55 | 2.0 | 2.4 | 5.0 | 9.0 | 4.0 | 8.95 | 8.95 |
| | E | 0.05 | 0.19 | 0.2 | 0.06 | 4.0 | 0.005 | 0.01 | 0.1 |
| R | B | 0.55 | 0.7 | 0.8 | 0.65 | 4.0 | 0.65 | 0.70 | 0.70 |
| | C | 1.52 | 2.0 | 2.4 | 5.0 | 9.0 | 4.0 | 8.9 | 8.95 |
| | E | 0.05 | 0.13 | 0.2 | 0.06 | 4.0 | 0.005 | 0.01 | 0.01 |

(3) Q709 ~ Q710

| | | Q709 | Q710 |
|---|---|---|---|
| P | B | 0 | 9.0 |
| | C | 9.0 | 9.0 |
| | E | 0 | 9.0 |
| R | B | 0 | 8.0 |
| | C | 9.0 | 0.02 |
| | E | 0 | 6.7 |

## WIRING DIAGRAM (AMPLIFIER)

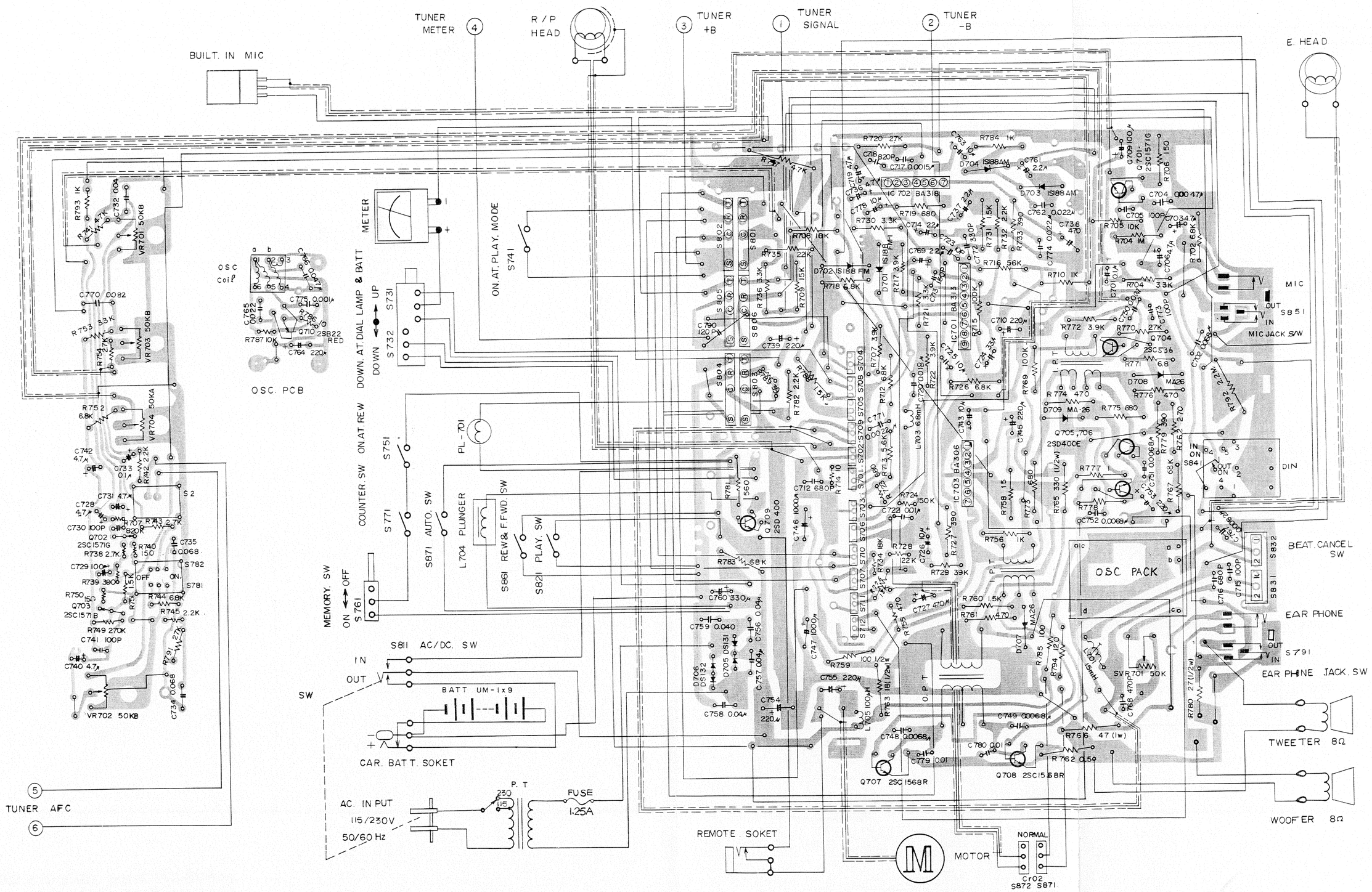

## DIAL CORD STRINGING

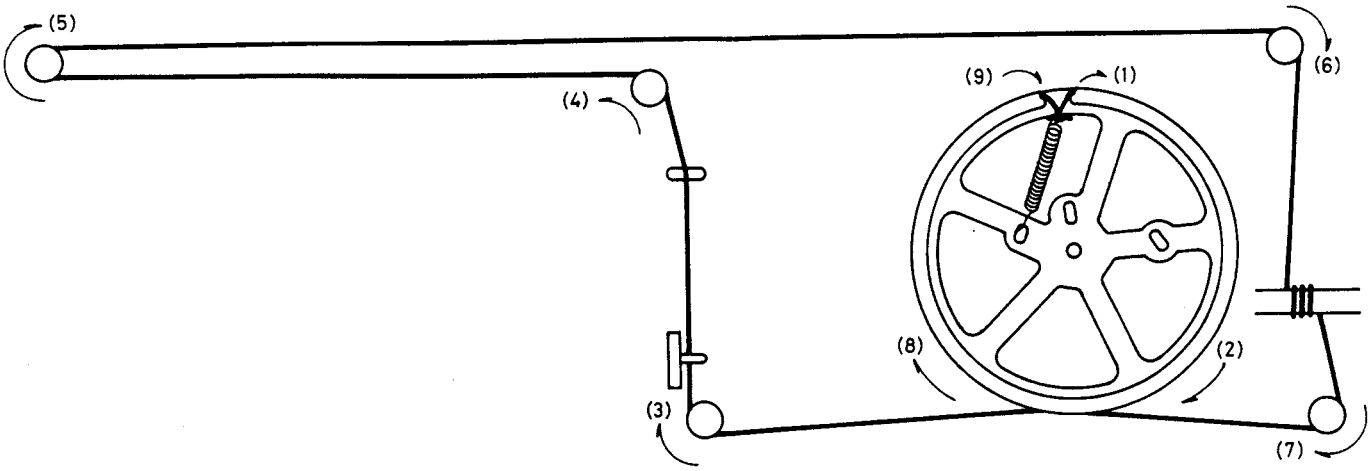

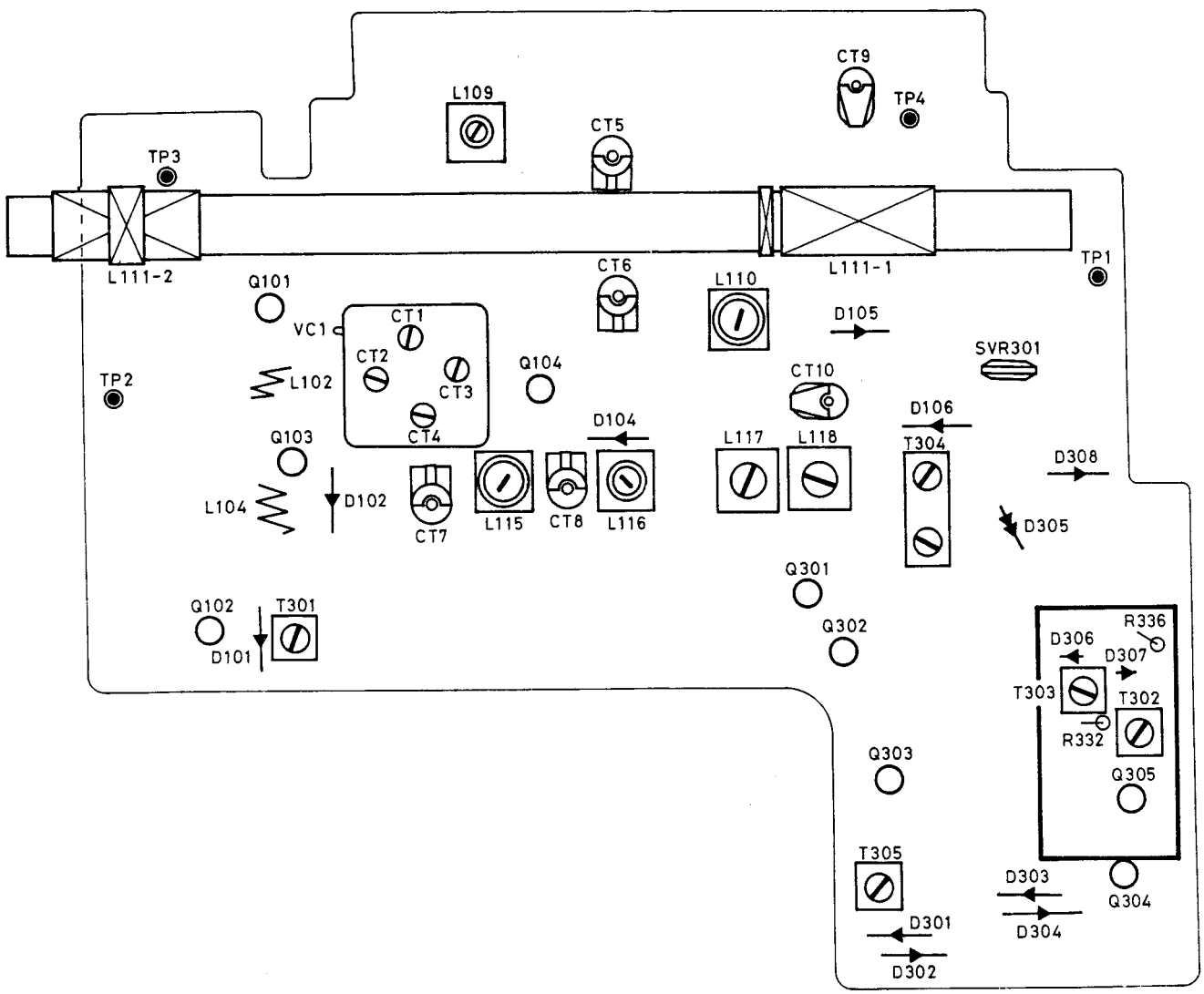
## PARTS LOCATION